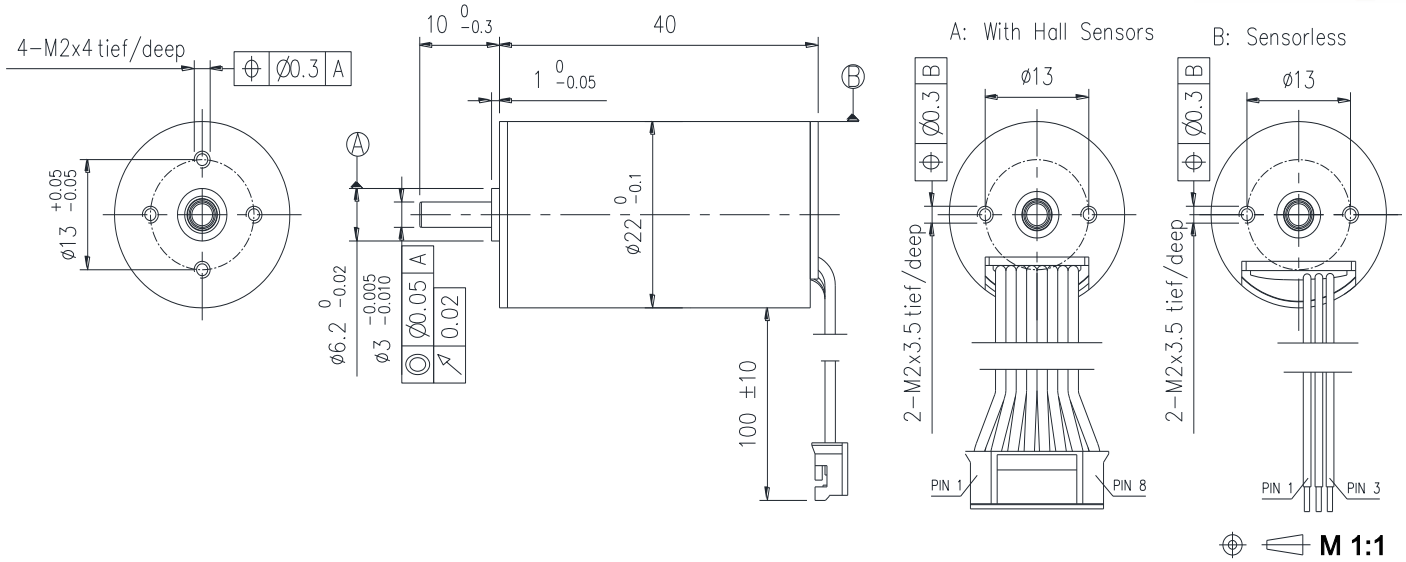

	Sensorless EC2240L-... / With hall sensor EC2240S-...	1216	2416	3016	3616				
Motor Data									
1	Nominal voltage V	12	24	30	36				
2	No load speed rpm	16748	16768	16713	16679				
3	No load current mA	183	115	87	73				
4	Nominal speed rpm	14354	14337	14360	14128				
5	Nominal torque mNm	12	12	12	12				
6	Nominal current A	1,96	1,01	0,8	0,67				
7	Stall torque mNm	83,9	82,8	85,2	78,5				
8	Stall current A	12,6	6,28	5,15	3,95				
9	Max. efficiency %	77,4	74,8	75,7	74,7				
10	Terminal resistance Ω	0,95	3,82	5,83	9,11				
11	Terminal inductance mH	0,07	0,28	0,44	0,64				
12	Torque constant mNm/A	6,74	13,4	16,9	20,2				
13	Speed constant rpm/V	1416	712	567	472				
14	Speed/torque gradient rpm/mNm	200	203	196	213				
15	Mechanical time constant ms	4,7	4,8	4,7	5,05				
16	Rotor inertia gcm^2	2,3	2,3	2,3	2,27				

17	Thermal resistance housing-ambient	12.7 K/W
18	Thermal resistance winding-housing	5.0 K/W
19	Thermal time constant winding	12 s
20	Thermal time constant motor	420 s
21	Ambient temprature	-40…+100°C
22	Max. permissible winding temperature	+150°C
23	Max. permissible speed	35000 rpm
24	Axial play at axial load <4 N	0 mm
	>4 N	max. 0.3 mm
25	Radial play	preloaded
26	Max. axial load (dynamic)	3.5 N
27	Max.force for press fits (static)	44 N
	(static, shaft supported)	1200 N
28	Max. radial loading, 5mm from flange	15 N
29	Number of pole pairs	1
30	Number of phases	3
31	Weight of motor	64 g

Operating Range

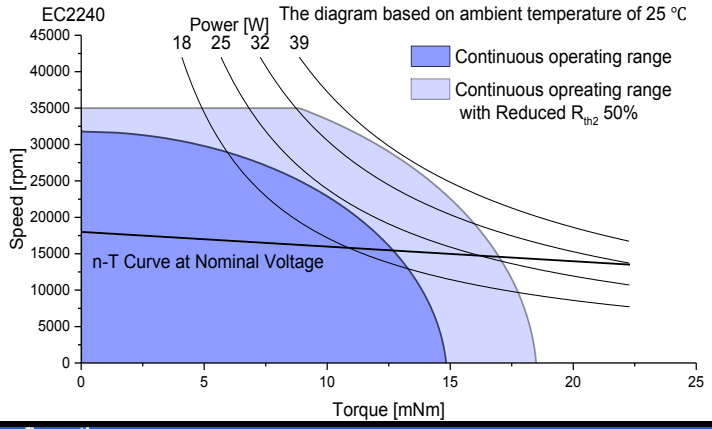

Connection

Connection A (Sensor) PVC

Pin 1	Vhall 3-18 VDC	AWG26	black
Pin 2	Hall sensor HA	AWG26	black
Pin 3	Hall sensor HB	AWG26	black
Pin 4	Hall sensor HC	AWG26	black
Pin 5	GND	AWG26	black
Pin 6	Motor winding MA	AWG26	black
Pin 7	Motor winding MB	AWG26	black
Pin 8	Motor winding MC	AWG26	black

Conector
JST PH2.0-8P

Connection B (Sensorless) PTFE

Pin 1	Motor winding MA	AWG26	yellow
Pin 2	Motor winding MB	AWG26	green
Pin 3	Motor winding MC	AWG26	blue

Configuration

Performance: Customized in the continuous operating range
Ball bearing: Preload
Flange: Standard frange front&back/customize the frange
Shaft: Length/Diameter/Cut face/double shaft/hollow shaft
Leadwire: PVC/Silicon/Teflon/UL No/Dimension/length
Connector: JST/MOLEX/TE